Attachment set for towel bar/tumbler mounting on two sides -

12 351 970 90

Attachment set for towel bar/tumbler mounting on two sides -

12 351 970 90

Attachment set for towel bar/tumbler mounting on two sides -

12 351 970 90

mm [inches]

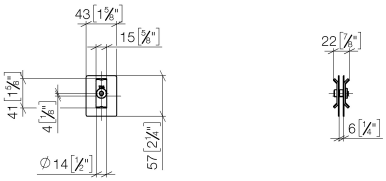

Attachment set for towel bar/tumbler mounting on two sides -
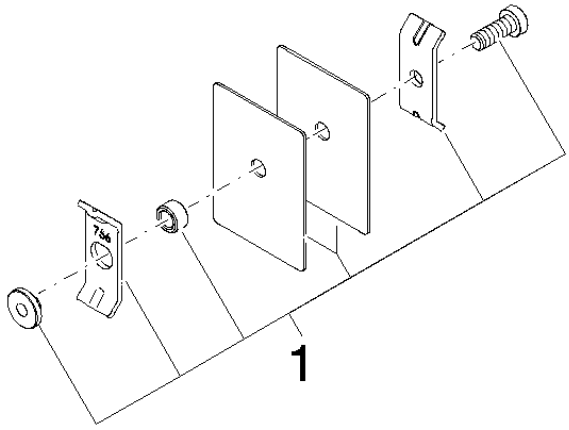
12 351 970 90